14.10.2020

Isola – Isola Up

Usage information

Description:

A shape reduced almost to pure function, an extremely minimalist design, bordering on absolute essentiality, are the formal characteristics that distinguish the series of operative furnishings mod. ISOLA produced by Centrufficio spa.

The upside-down **T-shaped** metal legs, whose aesthetic appearance is free of unnecessary decorative refinements, the three main functions of supporting the top, levelling on the floor and vertical wiring, combined with the melamine worktop, make up a truly unique technical unit that synthesizes shape, function and nothing more.

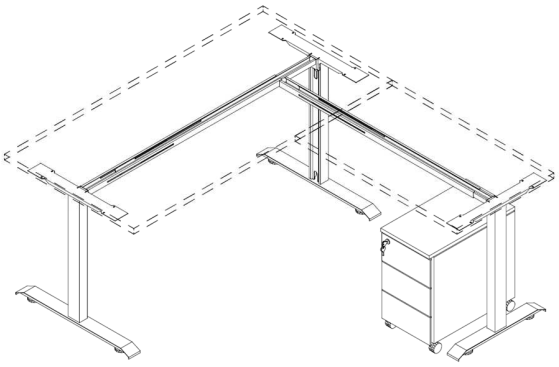

Also for the **Sit-Stand Desk version with electrically height adjustable top**, the design is rigorous and minimalist. In the height adjustable version each leg is equipped with a motorized column that allows the adjustment of the worktop in height.

With a Sit-Stand Desk the operator can therefore - at his discretion - choose whether to work seated, select the best height to position his worktop or even decide to work standing, simply by acting on the push-button panel under the worktop.

The technical up grade offered by the adjustable version guarantees that the structure has the same appearance and shape as the non-adjustable version, so that the two are perfectly complementary and can be integrated with each other.

Destination of use:

The **desks** and furniture of the **Isola** series are manufactured for office use.

The **reading tables** of the Isola series are artifacts whose use is intended in meeting rooms, reading rooms, banks, public and waiting rooms, hotels and restaurants, bars and cafeterias.

Component parts description:

Desk tops:

The desk tops are made of anti-scratch wood type melamine, thickness 30 mm., in solid grey and birch wood veneer finishes and are edged with 3 mm ABS edge in the same colour as the surface finish.

Abs edges are suitably bevelled and shaped according to current regulations so that there are no edges that could cause damage to the operator or third parties.

The two standard finishes are ready for delivery, upon request, both the tops and the other furnishing elements of the series can be made in one of the colors of your choice in the **"Multicolor"** folder. Also the tops produced on request will have ABS edges in the same color.

During the production phase, the tops are fitted with threaded zamak bushings to allow them to be fixed to the metal structure.

Metal structure:

The structural elements are obtained through simple production processes such as press-bending, punching, and continuous wire welding of properly shaped metal sheets.

All the components of the leg, vertical column, foot, upper bracket for fixing the tops are made of metal sheet 20/10 thick and are epoxy powder coated without heavy metals in **White Ral 9003 finish, smooth matt effect,** or in **Bonderized Grey finish with glossy effect.**

The vertical column has dimensions 70x50 mm and is shaped and drilled to allow vertical wiring. It is also equipped with a neudimium magnet that allows the cover of the cable compartment to be attached to it. This last element is made of sheet metal 10/10 thick and painted in the same finish of the high components.

Through the continuous wire welding the metal foot is joined to the vertical column. The foot is equipped with polypropylene adjustment feet with a diameter of 60 mm and a thickness of 10 mm.

The telescopic beams have a 30x40 mm section are built in such a way as to allow also a possible horizontal passage of the cables, and have flange heads on both sides with parallel pairs of inserts for bayonet coupling on the slots placed on the vertical column.

Due to their specificity, the telescopic beams also allow the use of the same shared leg on two contiguous workstations joined together.

Electrically height adjustable structure:

Isola Up telescopic structure is a metal structure composed of a fixed part and a height adjustable part, both in metal painted in **matt white smooth effect** Ral 9003.

The fixed part of the structure, the one on the ground, is equipped with adjustable feet that allow the levelling to the ground.

The telescopic beams make this structure ideal for worktops from L.120 to L.180 cm.

Each column has its own internal electric motor that allows the two sections that form the vertical body of the leg, to move telescopically one inside the other using the action of a worm screw placed inside.

The base section has dimensions 70x70 mm and is attached to the metal foot equipped with adjustable nylon feet.

The height adjustable section has dimensions 60x60 mm and ends with the upper horizontal body to which the end parts of the telescopic system of support beams and flat support brackets are screwed.

The telescopic system of supporting beams is composed of three sections and can be set in length in order to obtain desk configurations ranging from a minimum of 1120 mm to a maximum of 1700 mm.

The materials and technologies of construction as well as the standard finishes are completely similar to the non-height adjustable version described above.

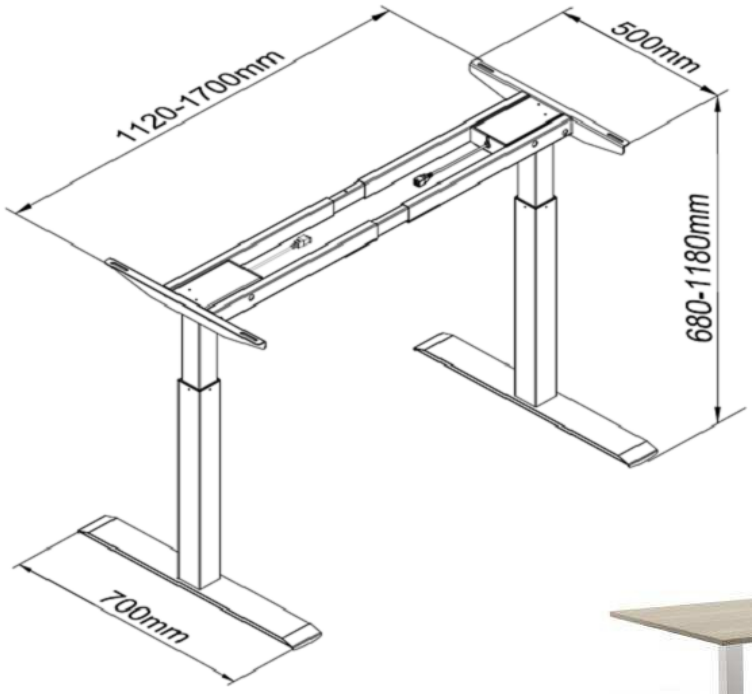

Abacus Item, Structural Elements and Complements:

ABACUS ITEMS AND COMPONENTS

SCRIVANIE LINEARI P.800 LINEAR DESKS D. 800

ARTICOLO ITEM	DIMENSIONS	CODE	FINISH
SCRIVANIA P.800 DESK D. 800	L.1800XP.800XH740	106-IS	STRUTTURA: BIANCO GRIGIO BONDERIZZATO
	L.1600XP.800XH740	105-IS	
	L.1400XP.800XH740	104-IS	
	L.1200XP.800XH740	103-IS	PIANI: BETULLA GRIGIO
	L.1000XP.800XH740	102-IS	
	L.800XP.800XH740	101-IS	

STRUCTURE WHITE BONDERIZED GREY

TOP: BIRCH GREY

SCRIVANIE LINEARI P.600

ARTICOLO	DIMENSIONI	CODICE	FINITURA
SCRIVANIA P.600	L.1200XP.600XH740	203-IS	STRUTTURA: BIANCO GRIGIO BONDERIZZATO
	L.1000XP.600XH740	202-IS	PIANI: BETULLA GRIGIO
	L.800XP.600XH740	201-IS	

ALLUNGO LATERALE P.600 SIDE TABLE D. 600

ARTICOLO	DIMENSIONI	CODICE	FINITURA
ALLUNGO LATERALE P.600	L.1200XP.600XH740	243-IS	STRUTTURA: BIANCO GRIGIO BONDERIZZATO
	L.1000XP.600XH740	242-IS	PIANI: BETULLA GRIGIO
	L.800XP.600XH740	241-IS	

ELECTRICALLY HEIGHT ADJUSTABLE DESK D. 800

ARTICOLO	DIMENSIONI	CODICE	FINITURA
SCRIVANIA ELEVABILE ELETTRICAMENTE P.800	L.1800XP.800 H MIN 680 / MAX 1180	106-IS UP	STRUTTURA: BIANCO PIANI: BETULLA GRIGIO
	L.1600XP.800 H MIN 680 / MAX 1180	105-IS UP	
	L.1400XP.800 H MIN 680 / MAX 1180	104-IS UP	
	L.1200XP.800 H MIN 680 / MAX 1180	103-IS UP	

ABACO ARTICOLI e COMPONENTI

CENTROFFICIO LORETO

ELEMENTI STRUTTURALI STRUCTURAL ELEMENTS

ARTICOLO	DIMENSIONI	CODICE	FINITURA
EXTENSIBLE DESK STRUCTURE KIT composed by: 2 terminal legs + 1 telescopic beam			
	L.1200/2000 H.710	001-IS BI	BIANCO WHITE
		001-IS GB	GRIGIO BONDERIZZATO BONDERIZED GREY
EXTENSION KIT RH/LH composed by: 1 shared legs + 1 telescopic beam			
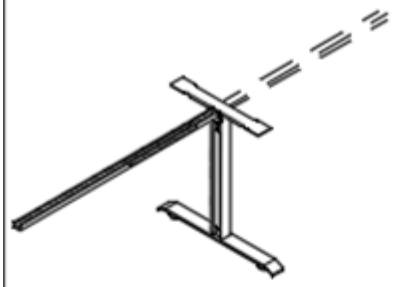	L.1200/2000 H.710	002-IS BI	BIANCO
		002-IS GB	GRIGIO BONDERIZZATO
EXTENSIBLE DESK STRUCTURE KIT composed by: 2 terminal legs + 1 telescopic beam			
	L.800/1200 H.710	003-IS BI	BIANCO
		003-IS GB	GRIGIO BONDERIZZATO
EXTENSIBLE SIDE DESK STRUCTURE KIT composed by: 2 terminal legs + 1 telescopic beam			
		004-IS BI	BIANCO

ABACO ARTICOLI e COMPONENTI

CENTRUFFICIO LORETO

ELEMENTI STRUTTURALI

ARTICOLO	DIMENSIONI	CODICE	FINITURA
GAMBA TERMINALE TERMINAL LEG 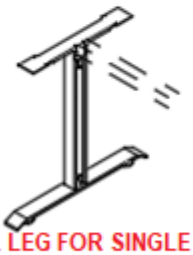 TERMINAL LEG FOR SINGLE DESK, CARTER INCLUDED GAMBA TERMINALE SINGOLA SCRIVANIA CARTER COMPRESO	L.700 P.70 H.710	**010-IS TE BI**	BIANCO
		010-IS TE GB	GRIGIO BONDERIZZATO
GAMBA CONDIVISA SHARED LEG 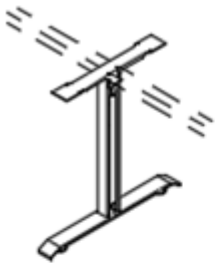 SHARED LEG FOR SINGLE DESK, CARTER INCLUDED GAMBA CONDIVISA SINGOLA SCRIVANIA CARTER COMPRESO	L.700 P.70 H.710	**010-IS CO BI**	BIANCO
		010-IS CO GB	GRIGIO BONDERIZZATO
GAMBA TERMINALE 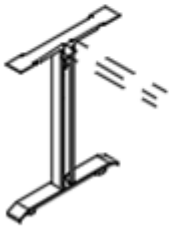 TERMINAL LEG FOR SIDE TABLE, CARTER INCLUDED GAMBA TERMINALE SINGOLA DATTILO CARTER COMPRESO	L.600 P.70 H.710	**011-IS TE BI**	BIANCO
		011-IS TE GB	GRIGIO BONDERIZZATO

IMPORTANT NOTES:

1) **<u>THE COMPOSED ARTICLES CONTAIN ONLY TERMINAL LEGS</u>**

2) **<u>THE EXTENSION KITS CONTAIN ONLY SHARED LEGS</u>**
   are to be used for multiple configurations that require shared structures, the tops are to be added according to the size required by the customer

3) **<u>THE PENINSULA TERMINAL SUPPORT REQUIRE ONLY THE SHARED LEG</u>**

4) in case the customer asks for a **<u>WORKSTATION with TERMINAL PENINSULA, THE STRUCTURE HAS TO BE COMPOSED USING THE SINGLE ELEMENTS</u>**

ABACO ARTICOLI e COMPONENTI

CENTROUFFICIO LORETO

ELEMENTI STRUTTURALI

ARTICOLO	DIMENSIONI	CODICE	FINITURA
TELESCOPIC BEAM PREPARED FOR ELECTRIFICATION	L.1400/2400 P.45 H.35	020-IS BI	BIANCO
		020-IS GB	GRIGIO BONDERIZZATO
TRAVE TELESCOPICA ELETTRIFICABILE	L.1200/2000 P.45 H.35	017-IS BI	BIANCO
		017-IS GB	GRIGIO BONDERIZZATO
TRAVE TELESCOPICA ELETTRIFICABILE	L.800/1200 P.45 H.35	018-IS BI	BIANCO
		018-IS GB	GRIGIO BONDERIZZATO
TERMINAL SUPPORT FOR PENINSULAS	L.400 P.45 H.35	019-IS BI	BIANCO
		019-IS GB	GRIGIO BONDERIZZATO
	NOTA IMPORTANTE: **DA USARE SOLO CON GAMBA CONDIVISA**		
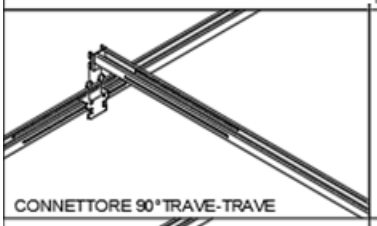 CONNETTORE 90° TRAVE-TRAVE	L.50 P.20 H.50	014-IS BI	BIANCO
		014-IS GB	GRIGIO BONDERIZZATO
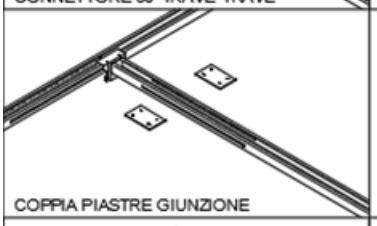 COPPIA PIASTRE GIUNZIONE	L.100 P.65 SP.3	0365/E BI	BIANCO
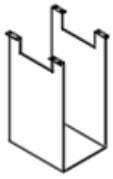 PORTA CPU SOSPESO	L.156/260 P.330 H.580	016-IS BI	BIANCO
		016-IS GB	GRIGIO BONDERIZZATO

IMPORTANT NOTE: TO BE USED ONLY WITH SHARED LEG

90° CONNECTOR BEAM- BEAM

PAIR OF JUNCTION PLATES

SUSPENDED CPU HOLDER

ABACO ARTICOLI e COMPONENTI

CENTROUFFICIO LORETO

PIANI SCRIVANIA DESK TOPS

ARTICOLO	DIMENSIONI		CODICE	FINITURA
P.800	L.1800XP.800XH30	1800	**NR 106 A**	BETULLA GRIGIO
	L.1600XP.800XH30	1600	**NR 105 A**	
	L.1400XP.800XH30	1400	**NR 104 A**	
	L.1200XP.800XH30	1200	**NR 103 A**	
	L.1000XP.800XH30	1000	**NR 102 A**	
	L.800XP.800XH30	800	**NR 101 A**	
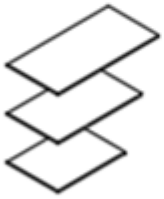 P.600	L.1200XP.600XH30	1200	**NR 203 A**	
	L.1000XP.600XH30	1000	**NR 202 A**	
	L.800XP.600XH30	800	**NR 201 A**	

RACCORDI E PENISOLE JUNCTIONS AND PENINSULAS

ARTICOLO		DIMENSIONI	CODICE	FINITURA
	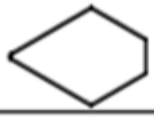	L.1230 P.1230 H.30	**NR 501 A**	BETULLA GRIGIO
		L.1030 P.1030 H.30	**NR 601 A**	
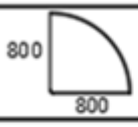		L.830 P.830 H.30	**NR 502 A**	BETULLA GRIGIO
		L.630 P.630 H.30	**NR 602 A**	
		L.600 P.800 H.30	**NR 503 A**	BETULLA GRIGIO
		L.600 P.600 H.30	**NR 603 A**	
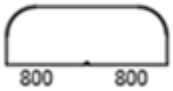	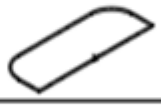	L.600 P.1660 H.30	**NR 504 A**	BETULLA GRIGIO
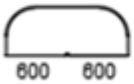		L.500 P.1260 H.30	**NR 604 A**	
		L.630 P.830 H.30	**NR 701 A SX**	BETULLA GRIGIO
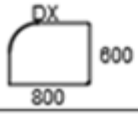		L.630 P.830 H.30	**NR 701 A DX**	

ABACO ARTICOLI e COMPONENTI

CENTROUFFICIO LORETO

CASSETTIERE su RUOTE PEDESTALS ON CASTORS

ARTICOLO	DIMENSIONI	CODICI		FINITURA
	L.45 X P.50 X H.53	MELAMINICO	MELAMINE **2173**	BETULLA GRIGIO
	L.42.5 X P.53 X H.58 dimensioni interno cassetti L35.2 X P.47 X H.8.8	METALLO	METAL **0173M**	BIANCO
	L.30 X P.53 X H.58 dimensioni interno cassetti L22.6 X P.47 X H.8.8	METALLO	METAL **0173-A mod. 300/P**	BIANCO
	L.42.5 X P.53 X H.58 dimensioni interno cassetti L35.2 X P.47 X H.8.8	METALLO	METAL **0173-AGB**	GRIGIO BOND.

DIMENSIONAL SCHEMES:

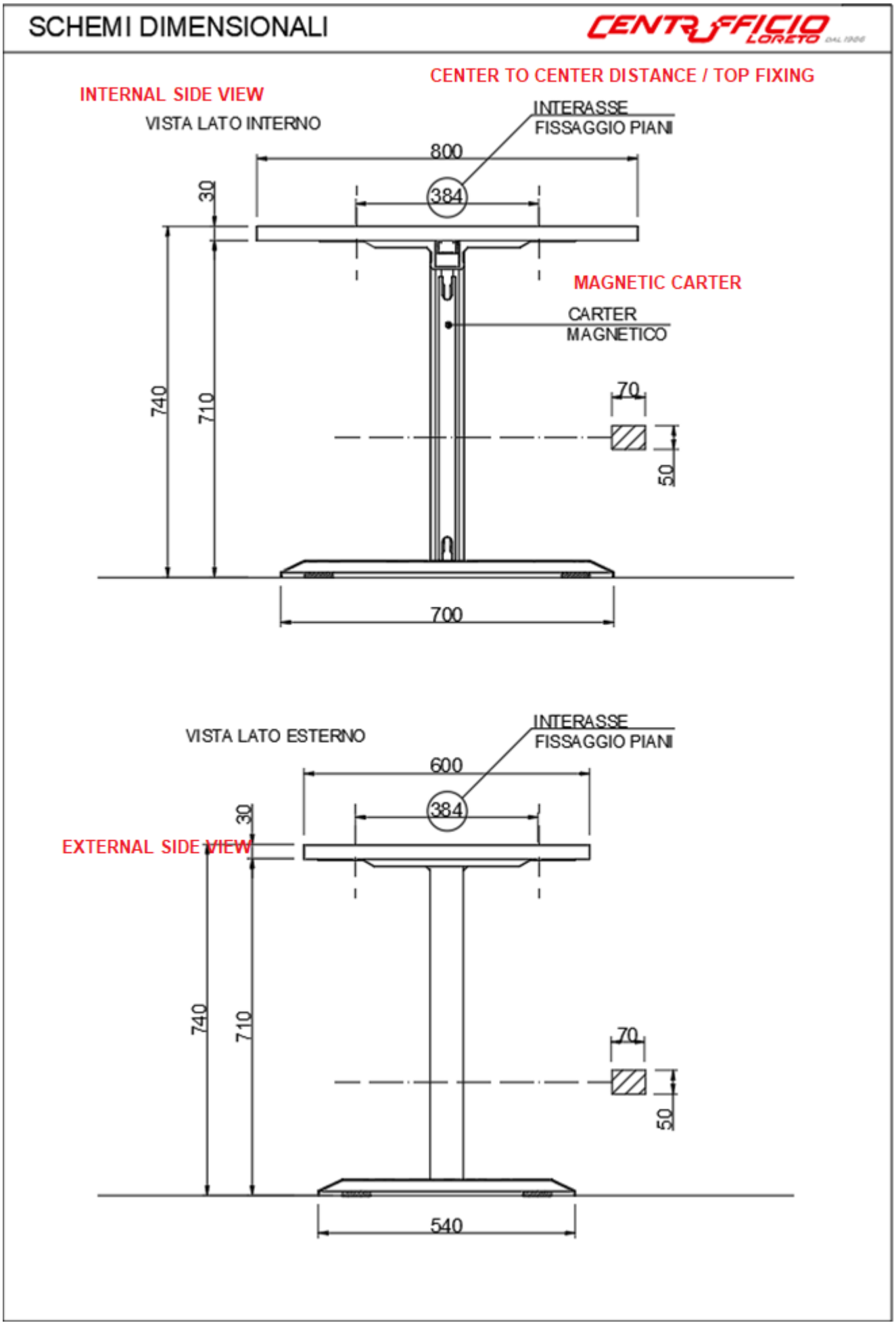

VERSIONE ELEVABILE ELETTRICAMENTE

CENTRUFFICIO LORETO

ELECTRICALLY HEIGH ADJUSTABLE VERSION

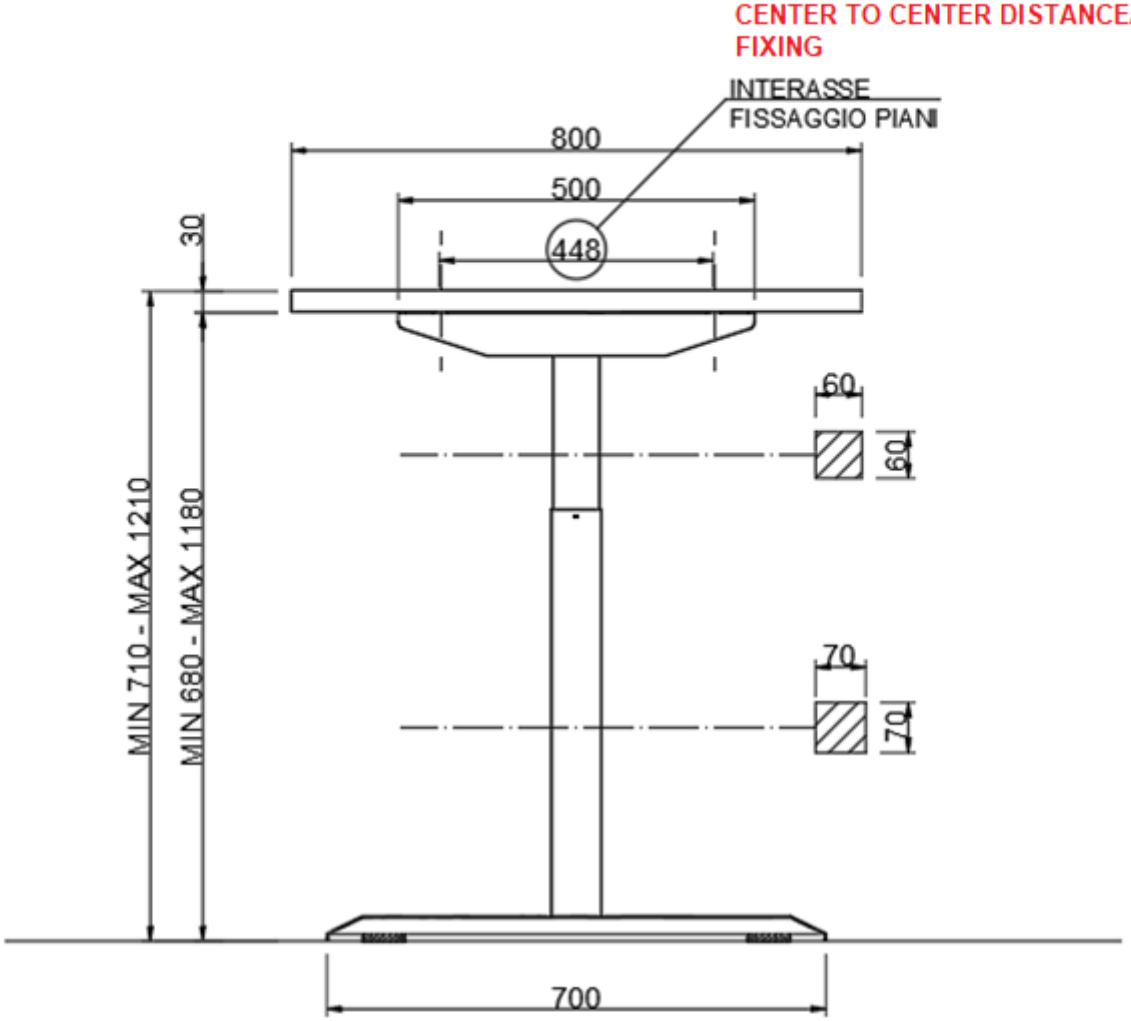

Series ISOLA EASY UP

Serie **ISOLA ESAY UP**

Dati tecnici: Technical data:	**Capacità:** Capacity:	Statica:	100 kg	Static
		Dinamica:	80 kg	Dinamic
	Sollevamento: Lifting	2 motori 2 motors		
	Velocità: Speed	36 mm/secondo 36 mm/second		
	Escursione altezza: Height excursion	680mm / 1180mm sottopiano 680 mm/1180 mm under the top		
	Dimensioni Struttura: Structure dimensions:	escursione lughezza 1120mm/1700mm		lenght excursion
		staffa supporto piani 500mm		top supporting bracket
		piede metallico 700 mm		metal foot
	Finiture: Finishes:	structure colour:	white	
		top finishes:	grey	
			birch	
			on request 25 colours	
			"multicolor" sample card	

Assembling schemes:

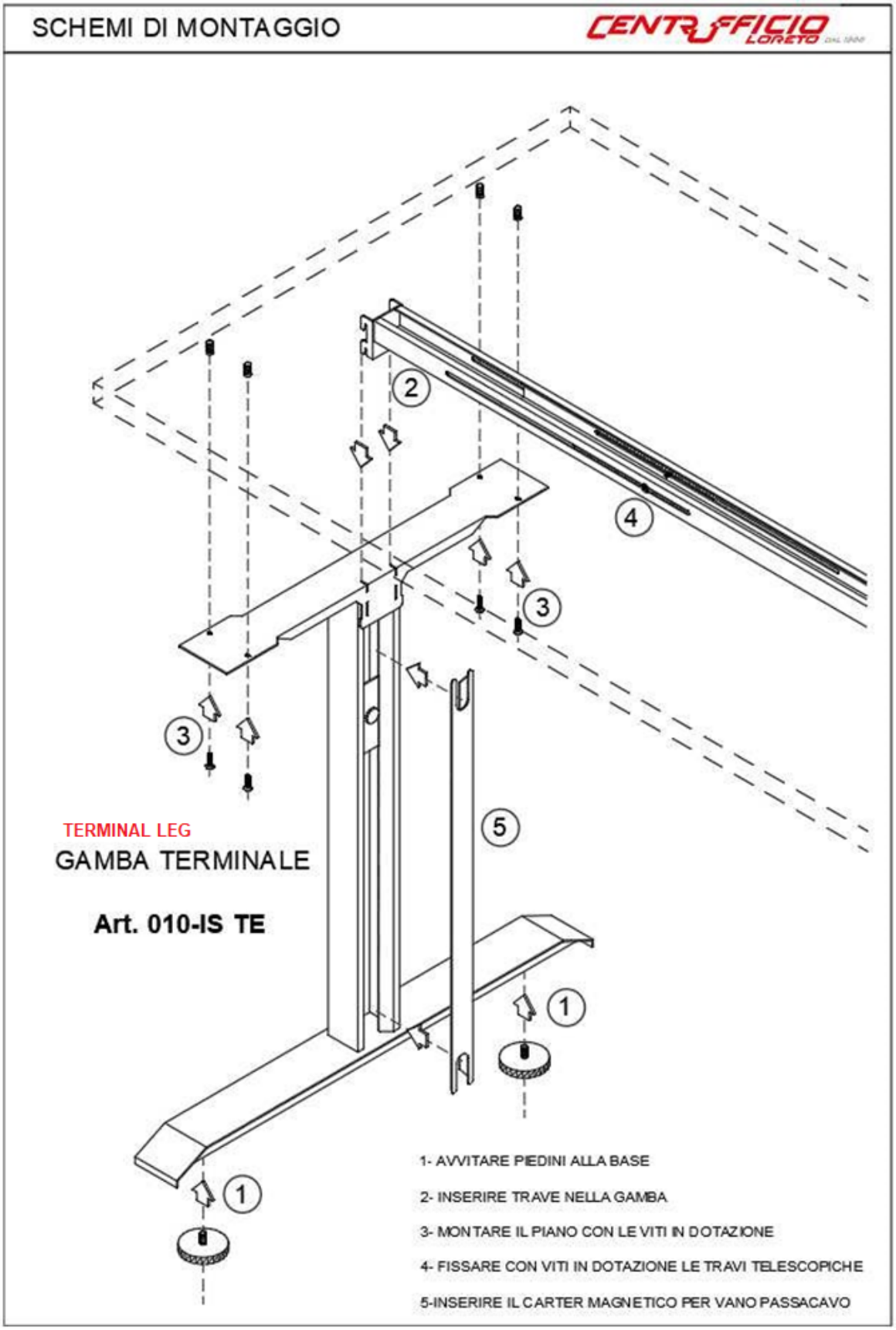

1. SCREW THE FEET TO THE BASE
2. INSERT THE BEAM INTO THE LEG
3. FIX THE TOP WITH THE SUPPLIED SCREWS
4. FIX THE TELESCOPIC SCREWS WITH THE SUPPLIED SCREWS
5. INSERT THE MAGNETIC CARTER FOR CABLE MANAGEMENT

SCHEMI DI MONTAGGIO

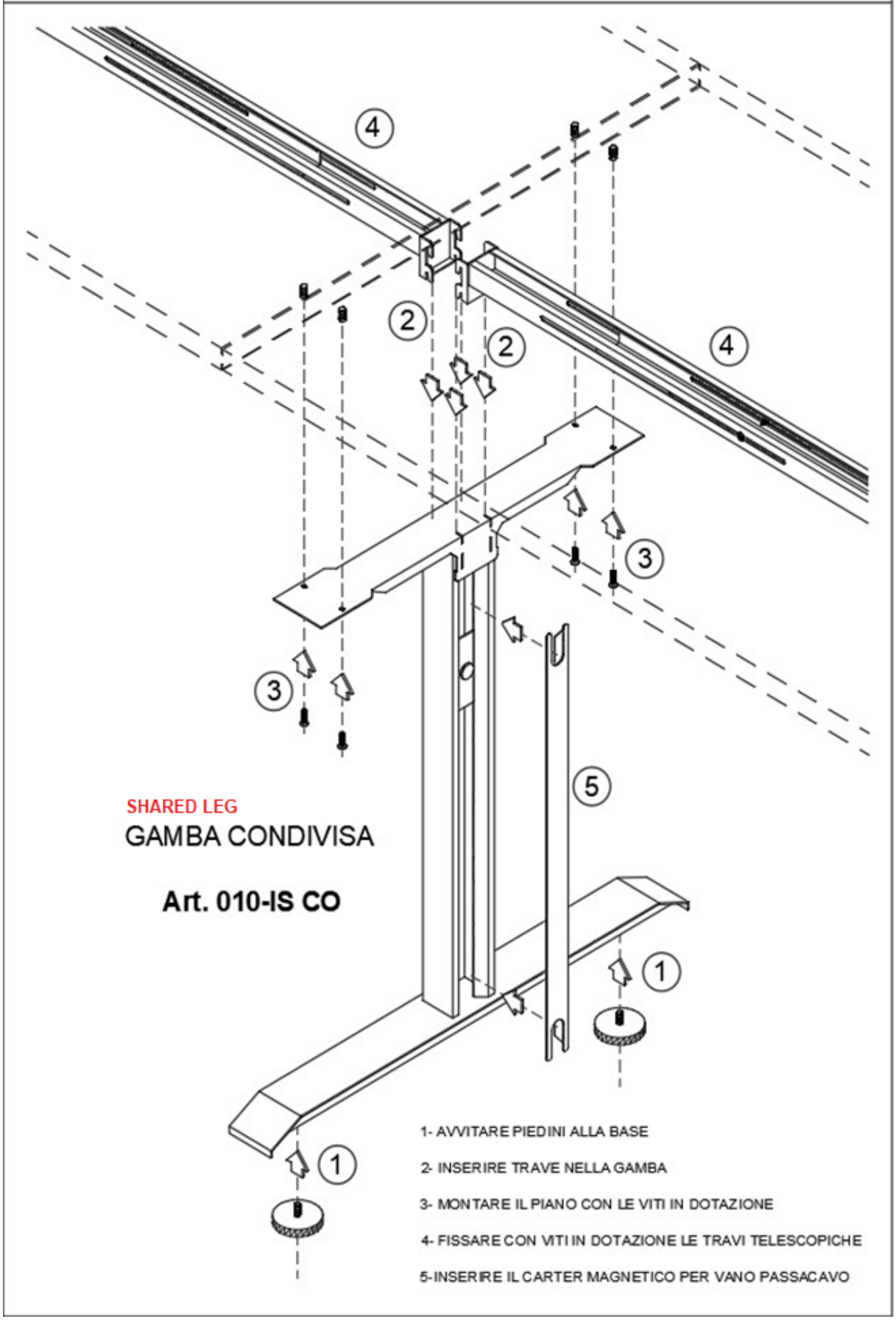

1. SCREW THE FEET TO THE BASE
2. INSERT THE BEAM INTO THE LEG
3. FIX THE TOP WITH THE SUPPLIED SCREWS
4. FIX THE TELESCOPIC BEAMS WITH THE SUPPLIED BEAMS
5. INSERT THE MAGNETIC CARTER FOR CABLE MANAGEMENT

ELECTRICALLY HEIGHT ADJUSTABLE VERSIONS

CENTRUFFICIO LORETO

ISTRUZIONI DI MONTAGGIO

ASSEMBLING INSTRUCTIONS

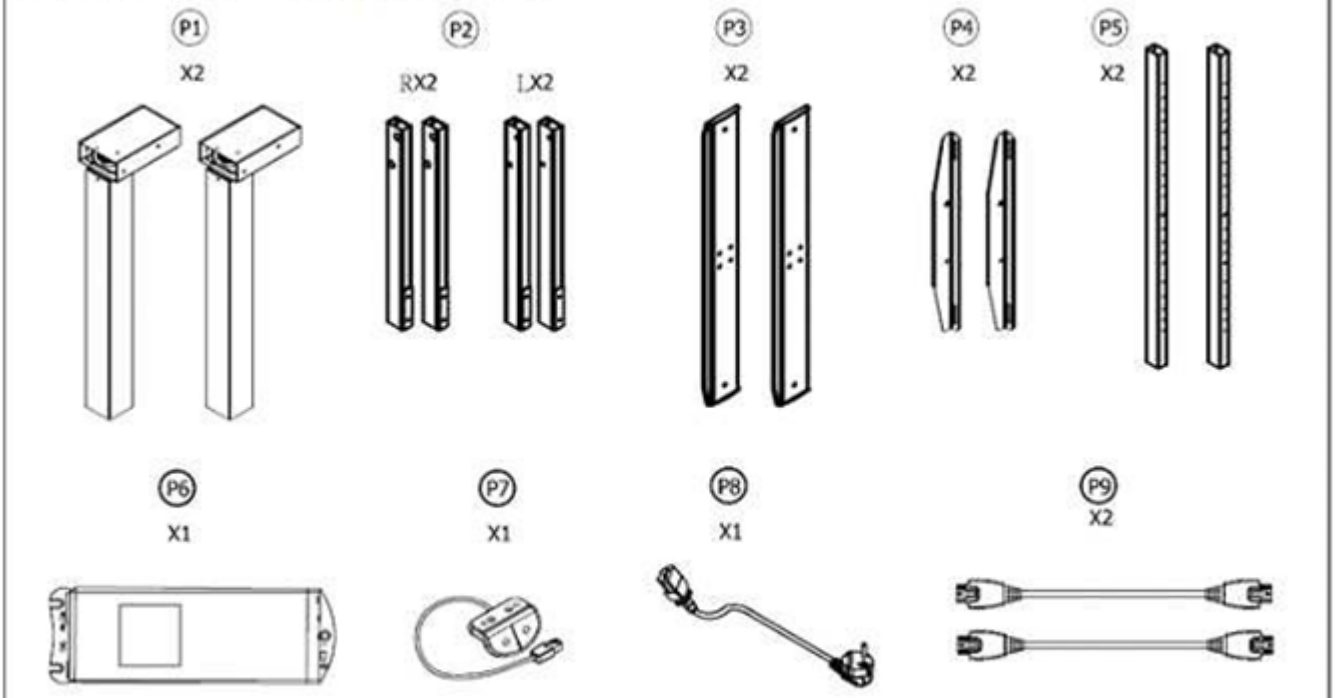

A	B	C	D	E	F	G	H
M6*20 X8	M8*15 X4	TAP4*15x7	M8*10 X8	M6*15 X4	TAP3*15 x2	M6*55 X2	5MM X1

I	J	K	L
4MM X1	M6*6 X8	3MM X1	X2

M	N
X4	X2

Step 1.

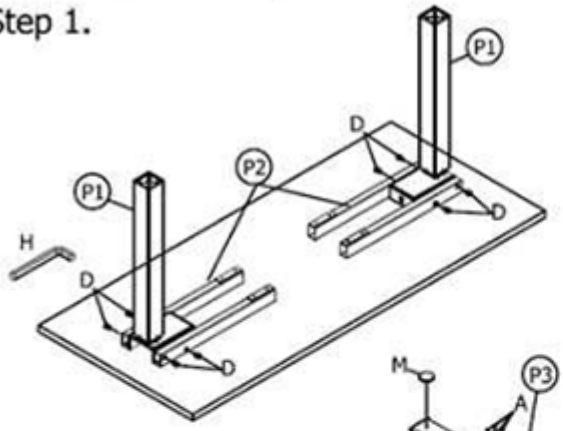

Step 2.

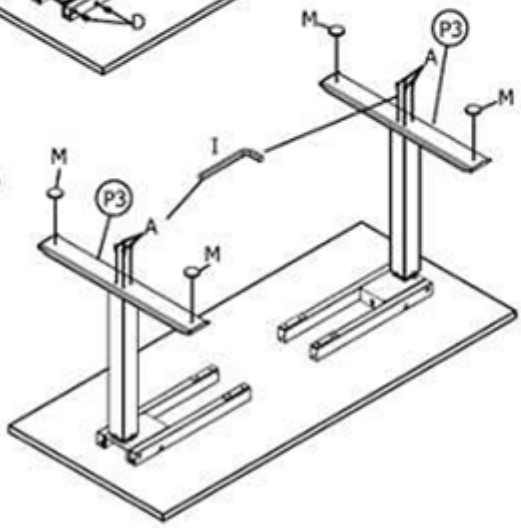

Step 3.

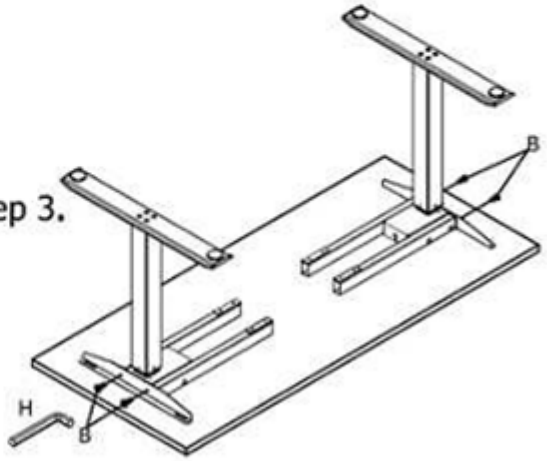

VERSIONE ELEVABILE ELETTRICAMENTE

CENTROFFICIO LORETO

Step 4.

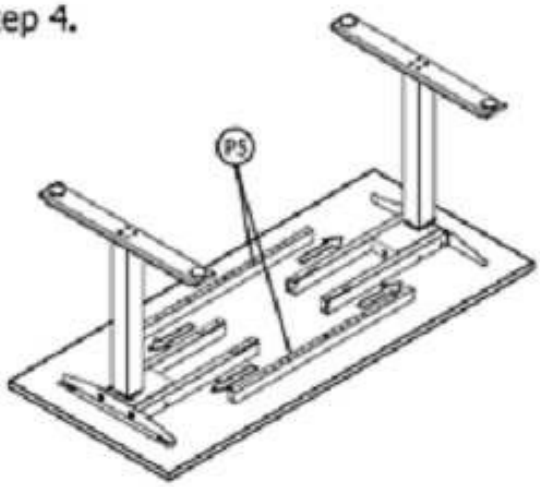

Step 5.

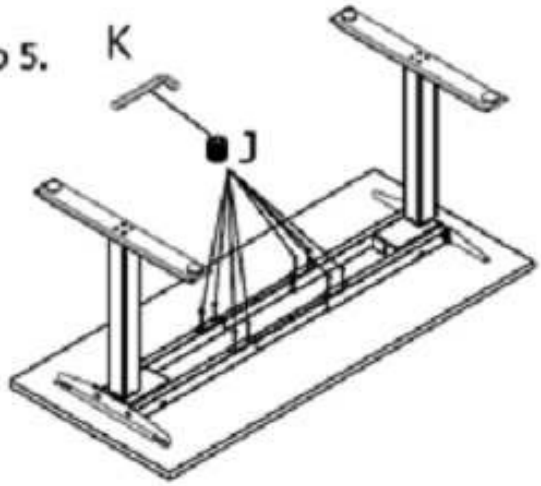

Step 6.

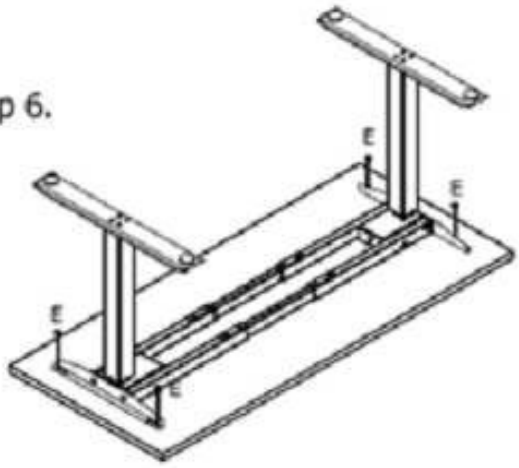

Step 7.

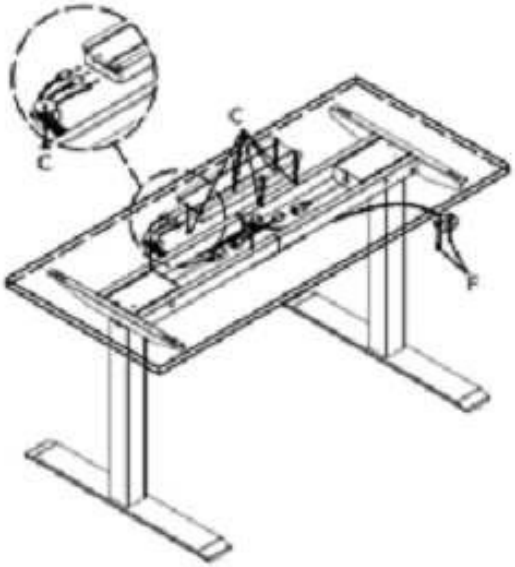

Step 8.

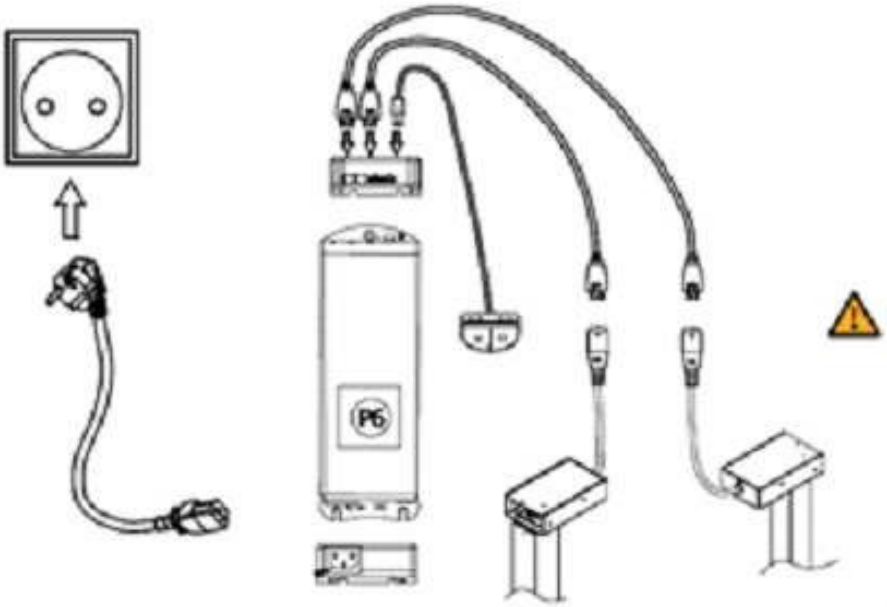

REV.102315

Specifications regarding the use of accessories:

Suspended CPU holder Art. 016-IS

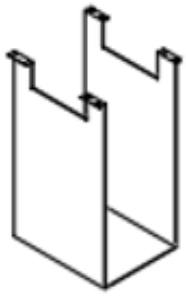

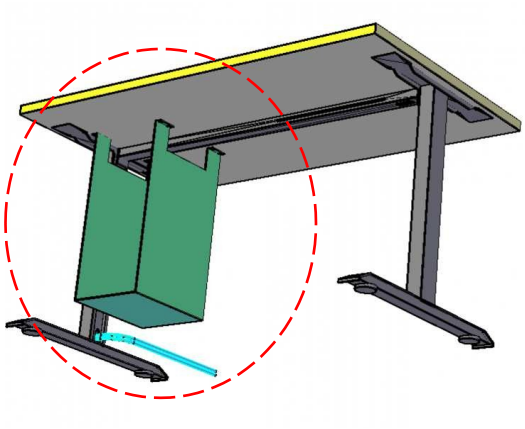

- It is possible to assemble it both on the standard desk and on the height adjustable verion
- It is possible to be mounted interchangeably on LH or RH
- It is fixed to the melamine top with the supplied self-threading screws

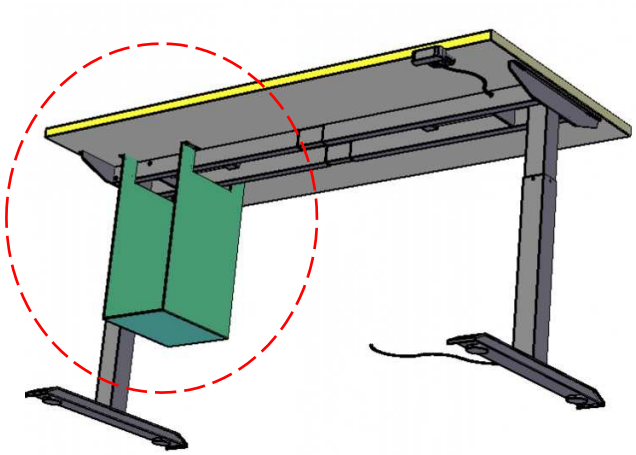

Metal modesty panel:

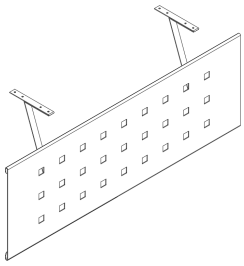

- available in 3 lenghts:

Art. GU 010	L.1150 mm
Art. GU 011	L. 900 mm
Art. GU 012	L. 700 mm

- it is fixed to the melamine top with the supplied self-threading screws
- Standard in Alluminum Ral 9006 finish
- On request white Ral 9003 and Bonderized Grey

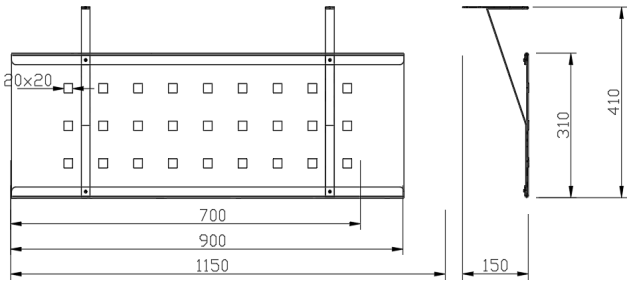

Desk Panel in Soundproofing Material:

Also for Isola series the use of screens in soundproofing material of the Tetrix series is availble.
The screens can be joined both to desks with standard structures and to those with electrically height adjustable structure.
They are fixed to the worktops by means of the special clamp supports.

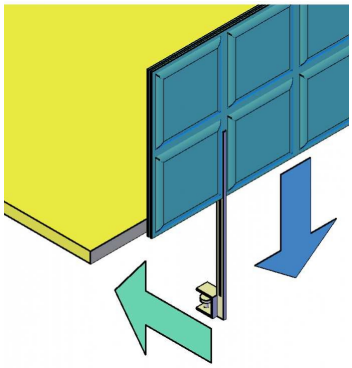

Tetrix panels simply snap from above in the housing provided into the clamp supports with fixing under the top with screws. These are inserted on the top in case of frontal fixing and on the underlying structure in case of lateral fixing.

Once in position, tighten the anchor screws in the lower part of the clamp.

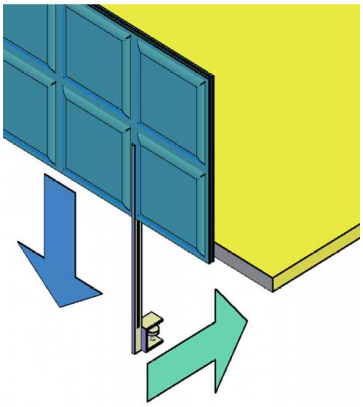

Wiring and Electrification Systems:

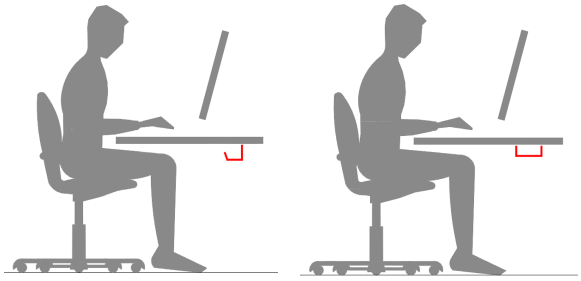

On both types of structure (fixed and height adjustable) the **horizontal wiring** can be obtained through the use of the **cable trays under the top** or through the use of **cable grip.** Both these elements are screwed to the melamine top through self-threading screws. *(for both items see the electrification price list).*

Cable trays under the top:

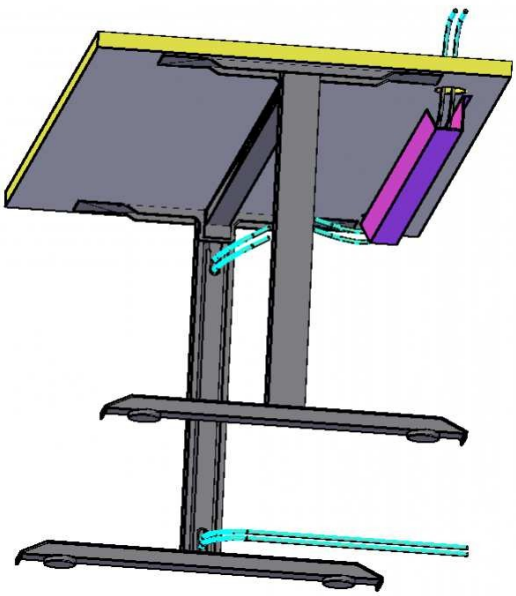

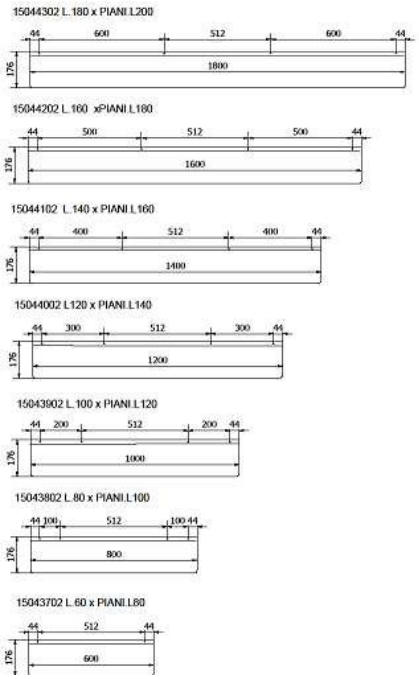

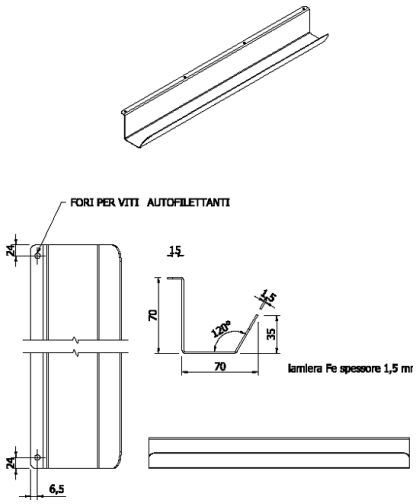

HOLES FOR SELF-THREADING SCREWS

Cable Grip:

Support for electrical and data cable management.

Available in two versions with 3 compartments in aluminum and black or 5 compartments in aluminium, white and black.

The practicality and universality, combined with the simplicity and safety of cable attachment, make the cable grip an excellent solution for the management of electrical connections where there is a need for tidy wiring.

For **vertical wiring** there is a differentiation of ways depending on the type of structure:

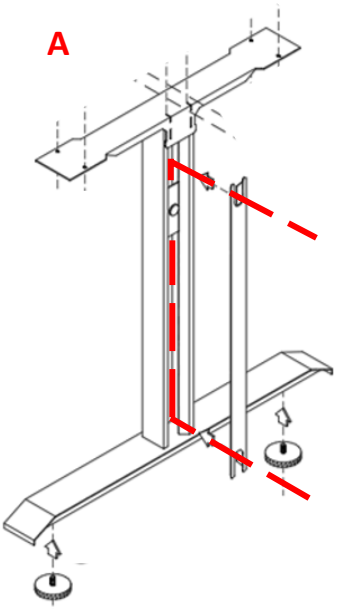

A The metal leg of the **fixed version** is also designed to be the vehicle of the vertical cabling as the **C**-section of the vertical shaft has been designed not only to support, but also as a compartment for wiring.

The vertical shaft is joined, by means of a magnet fastening, to a metal closing case suitably shaped on the heads for the cables' leakage.

B The metal leg of the **electrically height adjustable version** houses the lifting motor, therefore the vertical wiring of this type of structure must take place through the use of **extendible vertebras** screwed under the top such as the Helix model that can be seen on the electrification price list.

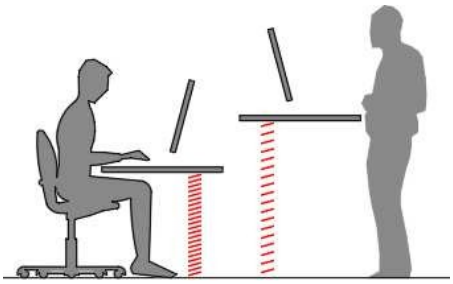

Top Access and Electrified Multisockets:

Standard worktops are NOT perforated for the passage of cables. The positioning of the cable grommets can be done with two different methods and two different items.

Cable grommet mod. Carrè with positioning on the table directly during the assembly operations: the installers, by using a 80 mm diameter cup milling cutter, drill the hole on the table and insert the plastic grommet.

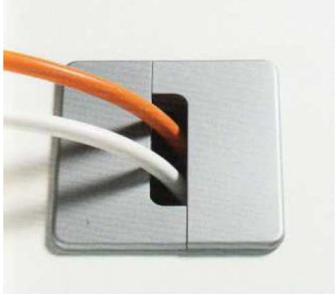

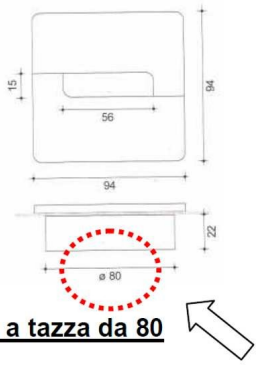

Attention: 80 mm diameter cup milling cutter

Cable grommet mod.Exit whose positioning on the plan implies a preliminary work of preparation of the tops by our carpentry department or by a trusted carpenter by the customer according to the following drilling scheme.

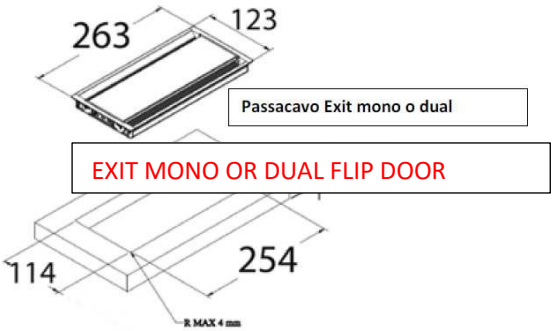

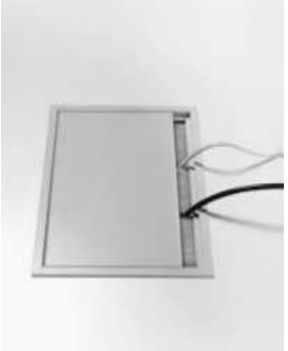

Also for Isola Series it is possible to provide the use of the **multisockets mod. Versaflap** that Centrufficio is standardizing on all the collections of its production.

Also for Versaflap multi-sockets, as well as for the Exit cable trays, the positioning on the surface implies a preliminary work to be carried out by our carpentry department or by a trusted carpenter by the customer according to the drilling scheme below. The hole for the Exit cable tray and Versaflap multi-socket is the same because the two products are congruent with each other.

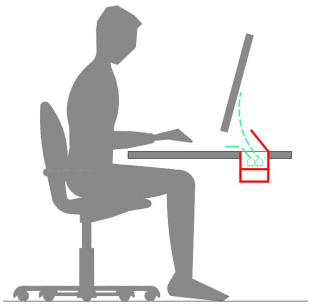

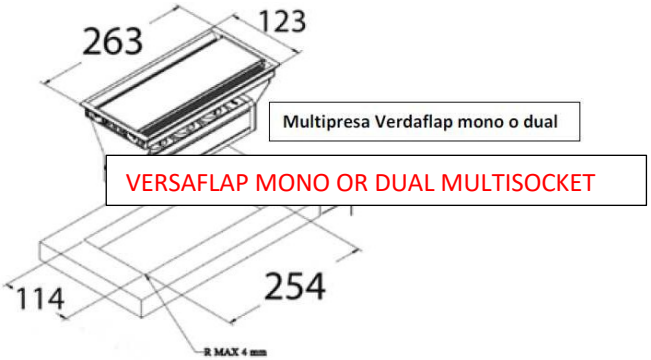

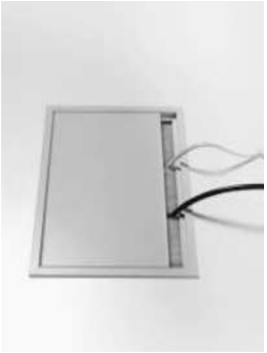

The configuration that has been decided to standardize is the one shown below but on request they can have different configurations.

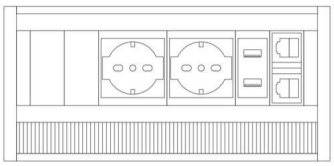

2 unel (schuko) 2 usb recharge + 2 Rj45 cat 6

Multi-sockets can be powered individually through **power supply cables** or they can be powered in serial mode through the use of **electrical connection cables**. In this second case a power supply cable is connected to a first socket-outlet and a connection cable that feeds a second socket-outlet to which is also connected a second connection cable that feeds a third socket-outlet and so on.

For detailed information on the articles in this section, please refer to the related sales price list.

Prescriptions for correct usage:

It is self-evident that the Buyer expects that the use of the good will not affect the safety of the user.

Sometimes, however, it is not so obvious that the satisfaction of such expectations depends only partially on the intrinsic qualities of the product, and on the fact that it has been designed and built taking into account all requirements of strength, durability, ergonomics and safety.

In fact, even the safest and best quality products, if used improperly or incorrectly, can degrade, damage, or fail to guarantee the safety of the user. All this naturally also applies to the Isola series.

General rules of use:

Desks are work tools, which are used in the office environment to perform the required tasks.

Absolutely AVOID IMPROPER USE, such as sitting in one or more people on the edges, or standing on them, or other potentially harmful bad habits.

Make sure that the ASSEMBLY of the workplace has BEEN PERFORMED CORRECTLY.

LEVEL CORRECTLY ON THE SOIL, i.e. make sure the desk rests well on the floor, using the adjustable feet supplied for this purpose.

AVOID the OVERLOADING of the desk with heavy materials, not pertinent to normal office use.

DO NOT use the desktops as the steps of a staircase.

High-radiation heat sources such as stoves and radiators can damage desks. You should therefore ensure sufficient distance to the desk from these elements.

DO NOT use water jets or liquid cleaners for cleaning the floors or other surfaces near the desk structure to prevent accidental splashes that could damage the surface finish of the support legs.

Specifically, for series that include desks with height adjustable tops and/or movements in general:

in addition to the arguments in the previous paragraph, also follow the following instructions:

DO NOT approach desks with height adjustable mechanisms (electrical or manual) to fixed top desks in order to avoid the guillotine effect during the movement of the top.
DO NOT place elements higher than the height reached by the worktop in its lowest position under the desk top.
DO NOT join in any way a desk with a fixed structure to a desk with a height-adjustable structure.

DO NOT join together a desk that can be raised to a fixed structure coplanar extension.

DO NOT join two electrically height adjustable desks together in any way. DO NOT use the electric lift desk as a "freight elevator" to lift weights. DO NOT place tops larger than the dimensions recommended on the lift table itself.
DO NOT make any modifications and/or alterations to the motion transmission components.

DO NOT modify or tamper with the electrical equipment, connection and power supply sockets

Relationship between Dimensional Schemes, Usage Requirements, Location of Workstations:

respecting what listed in the two previous sections, the following mirror illustrates how the dimensional data of the desks mod. ISOLA and ISOLA UP allow without constraints or prescriptions the most common locations of the workstations, whether they are for a single operator or for several operators in relation to each other.

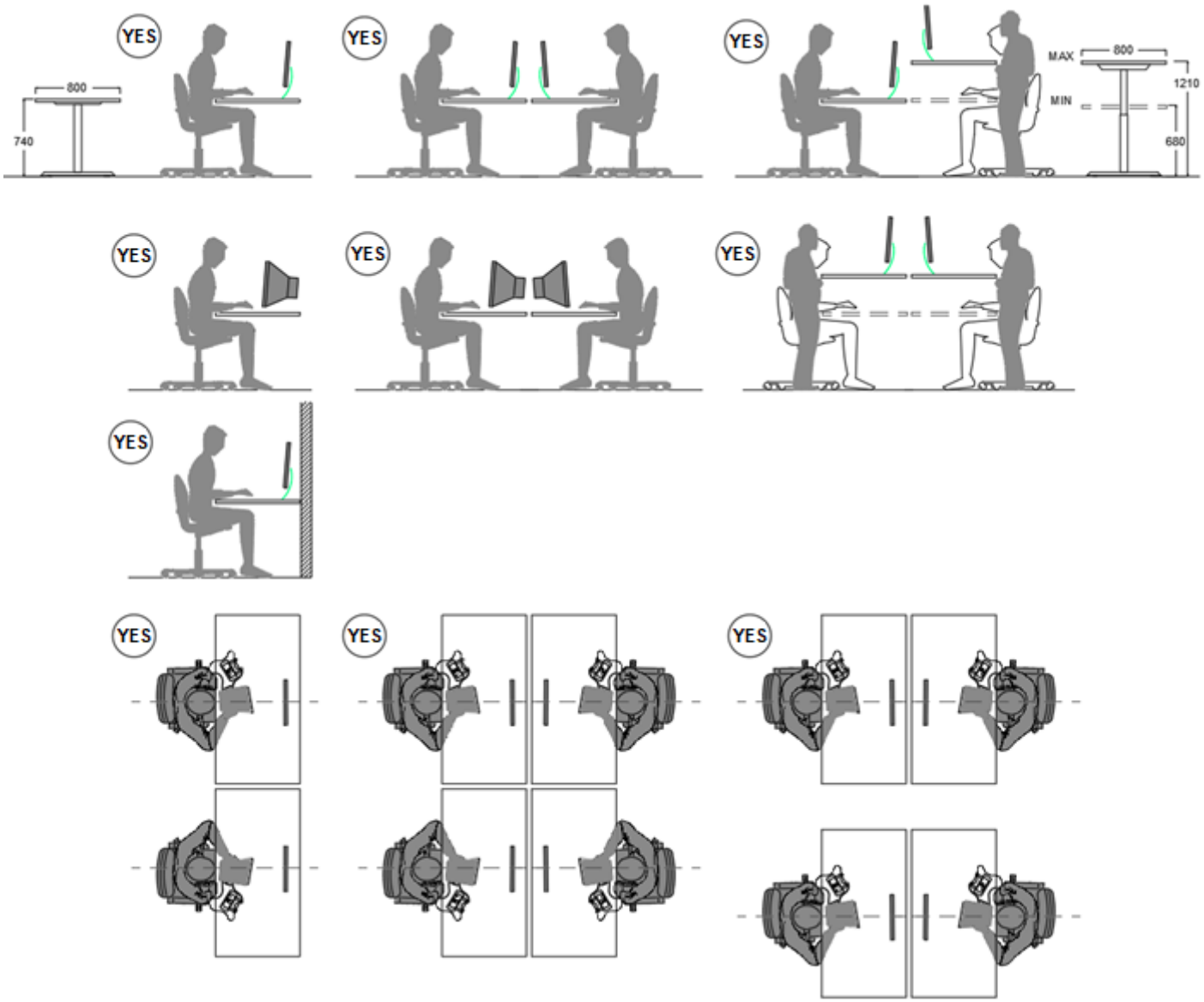

Use and Maintenance:
The regular and appropriate cleaning of the furniture is an important and determining factor for the lengthening of their life. For cleaning, however, some precautions are necessary to avoid damage to the surface finish. In general it is necessary to avoid abrasive materials or aggressive liquids that could damage the product.

When cleaning flat surfaces, the movement of the cloth must always be horizontal or vertical, do not make circular movements as the rubbing force is concentrated in only one point and halos or surface marks can be created.

Before working with products used for the first time, it is advisable to carry out a test on a limited and hidden area. There are microfiber cloths on the market, which are used according to the manufacturer's instructions and are suitable for cleaning most of the materials present in the working environment

- **Melamine-faced parts:**
  For ordinary cleaning use a soft cotton cloth dampened with lukewarm water and non-aggressive detergents; alternatively with a mixture of 95% water and 5% denatured alcohol. The use of the cleaning liquid must always be moderate.

  Caution: excessive use of liquids can generally cause infiltration between the panel and the edge, with possible swelling of the panel.

  DO NOT USE: Alkaline detergents, or detergents containing abrasives or soda. Do not use pumice, metal wool pads, cloths with rough or abrasive surfaces, waxes or other protective treatments.

- **Painted metal parts:**
  For cleaning use a soft cotton cloth dampened with slightly soapy water (with neutral soap) or lukewarm water and non-aggressive detergents, dry immediately with a soft cloth.

  DO NOT USE dust and abrasive products as they will scratch the surface. Similarly, do not use brillo pads and products excessively aggressive for the surface such as those containing chlorine, muriatic acid, bleach.

  During routine cleaning, be very careful in the vicinity of electrical, telephone and data outlets.

  In case of movement, do not drag the desk along the floor, but lift it acting on the metal parts and not on the melamine top and place it in the desired position. In the presence of wiring, electrical telephone etc., avoid any movement, except in the presence of specialized technicians.